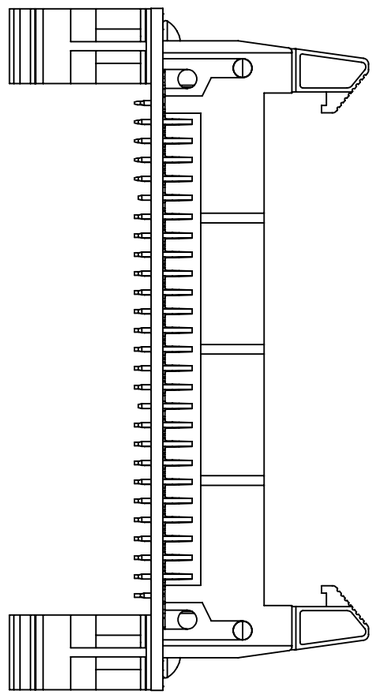

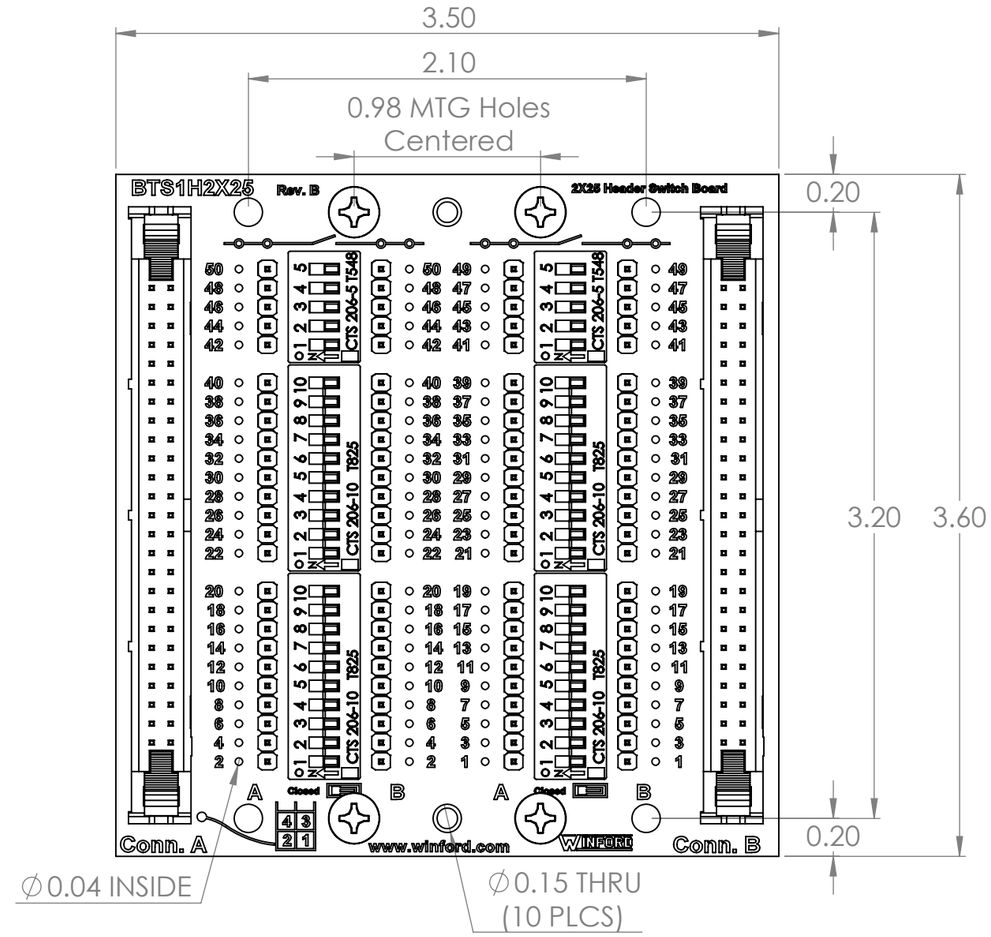

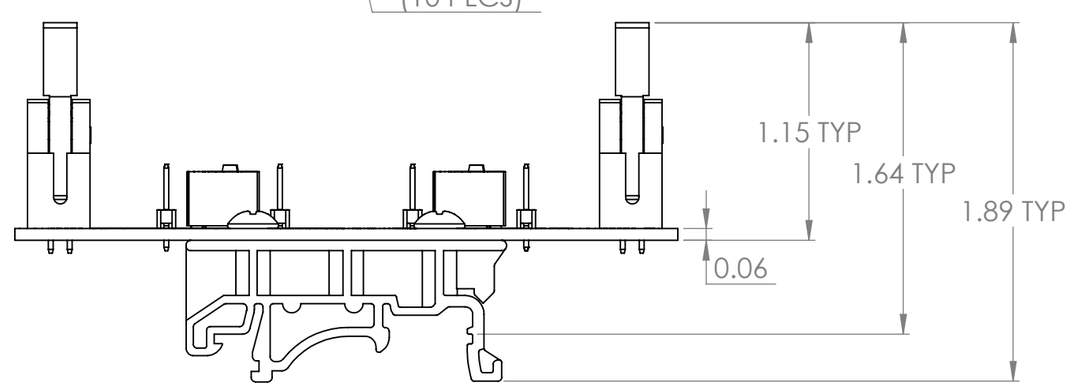

Connector Pinout

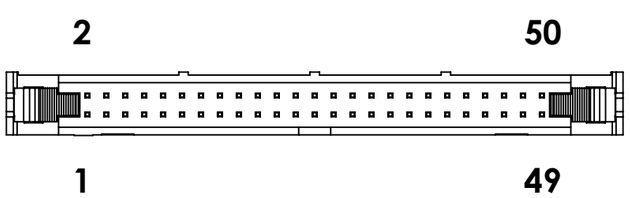

DIM: INCH	DATE: 01/17/2022	RoHS COMPLIANT: Yes	DESCRIPTION: 2X25 0.1" Header Diagnostic Breakout Board
WINFORD	WINFORD ENGINEERING, LLC 4561 GARFIELD ROAD AUBURN, MI 48611		PART NUMBER (S): BTS1H2X25-DIN
www.winford.com	989-671-9721		PART REVISION: B